COUPER 24 KIT

SWING GATE OPERATOR

TECHNICIAL SPECIFICATIONS

TECHNICIAL SPECIFICATIONS	Couper 24V
Power Source (VAC 50Hz)	230
Engine Power Supply (Vac/Vdc)	24
Motor Power (W)	85
Operating Temperature (°C)	-20 ÷ +50
IP/Raiting (IP)	44
Speed (cm/sec)	1.3/1.6
Wing Lenght (m)	2
Motor Size (mm)	100x104x780
Weight (Kg)	6
Maximum Door Weight (Kg)	250

COUPER 24 MECHANİCAL INSTALLATION

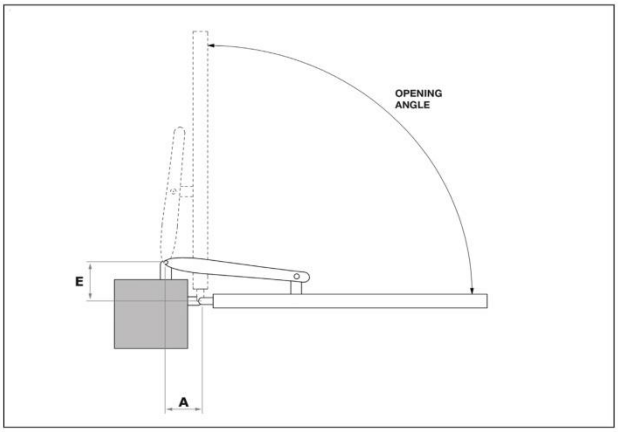

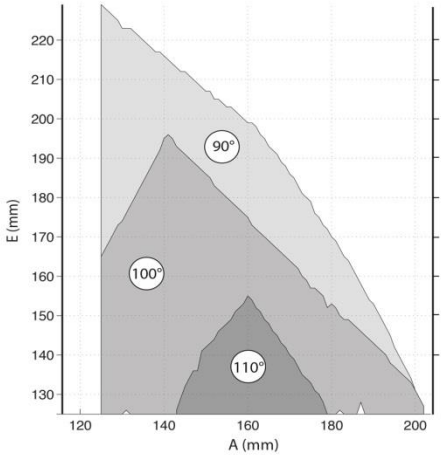

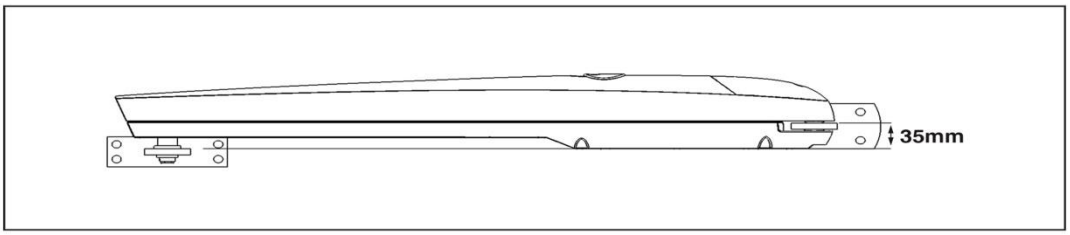

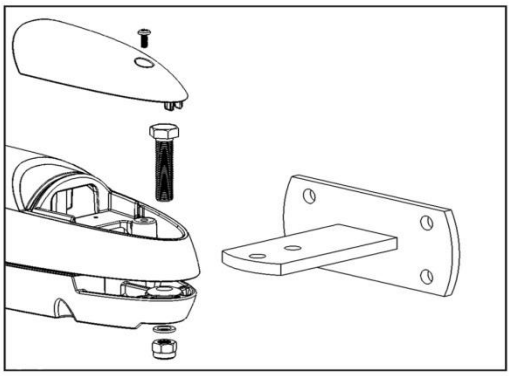

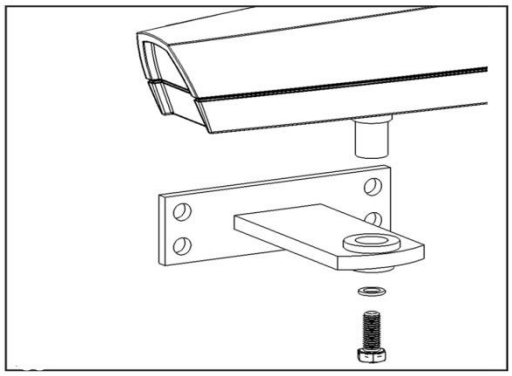

USAGE AREA

For 24V DC motors, it is suitable for use with both mechanical and electronic limit switch motors. One motor or two motors have the ability to operate. With these characteristics it is suitable to use with;

1. Sliding Gate Motors
2. Swing Gate Motors with one leaf or two leaves
3. Barriers
4. Sectional Doors

It is suitable for intensive use. It provides high security with jam detection sensitivity and two sets of safety photocell-connectable features. With "soft start - soft stop" operating feature, Protect the motor and mechanical system at the top level against to abrasion. Flashlight traffic light and electric lock can be connected. It is advantageous that the card has a modular structure.

TECHNICAL SPECIFICATIONS

Input Voltage	230 VAC
Motor output voltage	24 VDC
Operating Current	1,1 A / 5 A
Power	85 / 550 W
Motor Connection Terminal	24 VDC 2 units (2nd motor with additional card)
Safety Photocell Energy Terminal	12-24 VAC/DC 2 units
Flashlight Terminal	24 VDC
Traffic Lamp Terminal	24 VDC (Changing Flashlight Card)
Electrical Lock Terminal	12-24 VDC
Operating Temprature	-20 / + 55

G24 CONTROL CARD'S MODULAR CARDS

RF433 -S) Remote Control Receiver Card

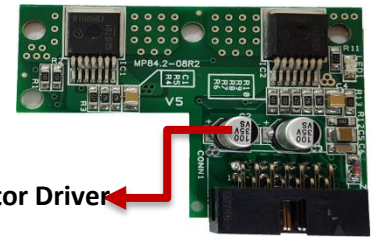

(G24-MTS) Second Motor Driver Card

(G24-FLA/F) Flashlight Card

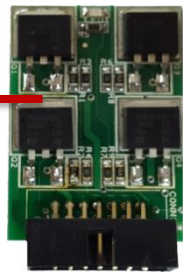

(G24-FLA/E) Traffic Lamp + Flashlight + Electrical Lock Card

CONTROL CARD CONNECTION SCHEMA

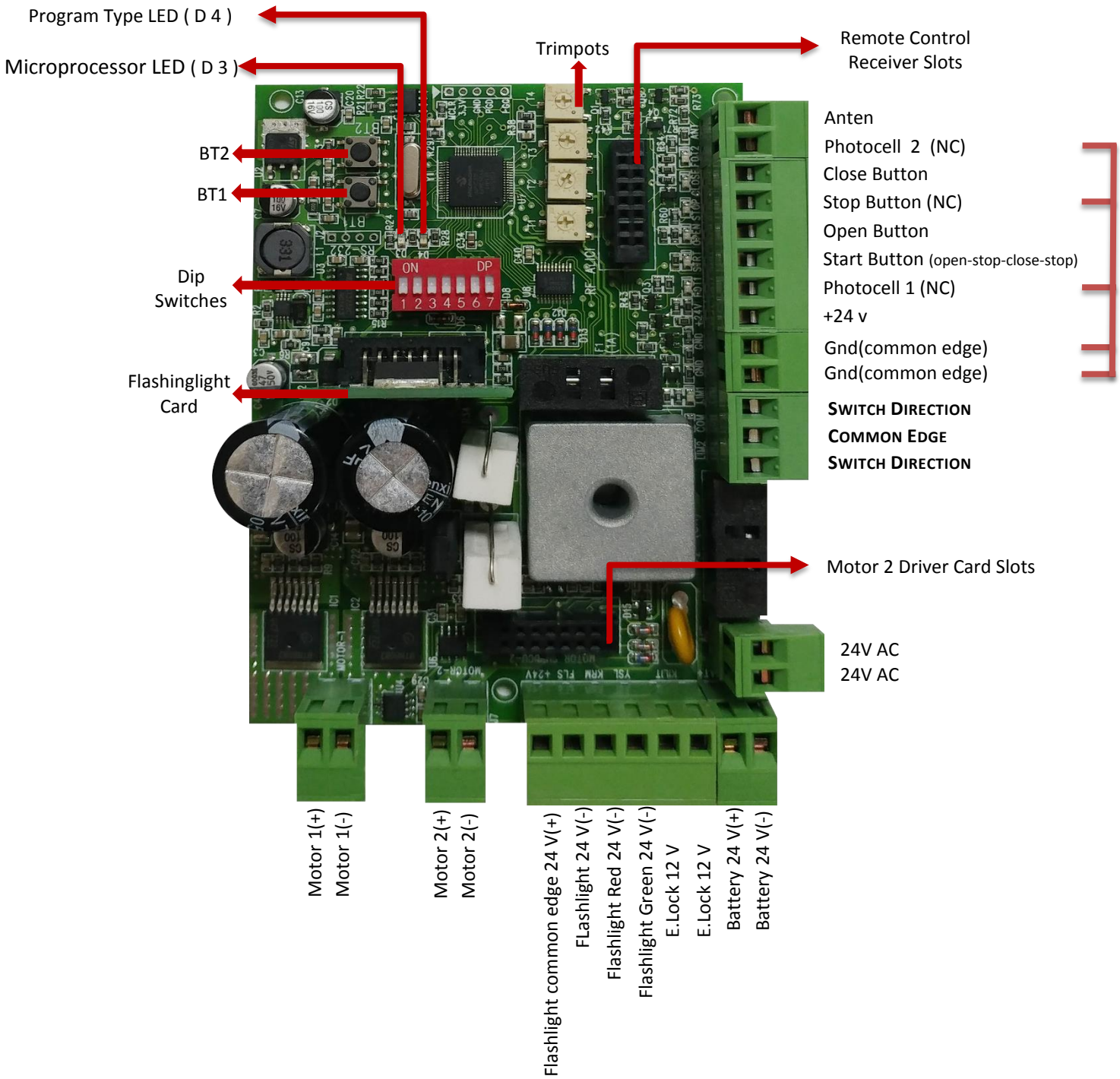

Note: With the condition that the bridge is at a common end, a bridge must be made for every NC contact that is not used on the card, otherwise the system will not work.

Working of Photocell 1: If the contact of the photocells is cut off when the door moves in the opening or closing way, the motor stops and starts to move in direction of opening.
Working of Photocell2when the door is opening if the contact of the photocells is cut off, the motor stops and waits until the contact resumes, after contact is delivered again, it starts to move in the direction of opening.

BUTTON FUNCTIONS

BT2 program type selecting button:
It is used to select the motor type. In factory settings, the motor type of the G24 card is selected according to the product on which it is installed. However, if there is a situation that the motor type has to be selected, the motor selection will change as long as you hold down the BT2 button. The selected motor type will be indicated by the yellow LED (LED 5).

Motor Type LED (LED 5):

For Swing Gate Motor	:	Steady lighting,
For Barrier	:	No Lighting,
For Sliding Gate Motor	:	Lighting fixed intervals,
For Sectional Door Motor	:	Lighting fast intervals,

Flashlihgt Working Mode : You can change the operation mode of the flashlight if you keep BT2 button pressed while defining the operating limit;

• Flashlight, steady light when the motor is running.
• Flashlight flashes as long as the motor is running.
If automatic closing is enabled, from the moment the door starts to open (Including automatic shutdown time) the flashlight is active until the closing is complete.

Traffic Lamp working mode: When the door is opening and closing, the red lights are on, and when the door is fully opened the green light is on.

If automatic shut-off is activated, the flashing light is activated from the moment the door starts to open (including the automatic shut-off time) until the closing is complete.

BT1 Programming Button:

The motor type should be chosen before press the programming button. It automatically defines the door opening and closing limits when the BT1 button is pressed. Once you have programmed, you do not need to do it again.

DIPSWITCH FUNCTIONS

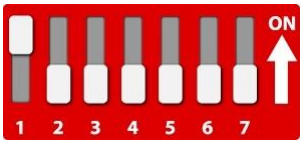

Automatic Closing is ON (Time is adjusted with T2 trimpod)

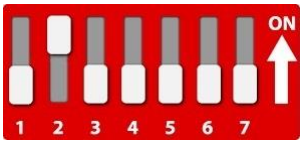

Photocell 2 is active

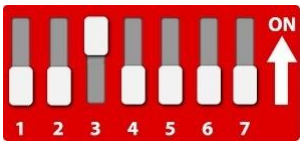

Motor Speed %75 active

Changes Motor and switch direction

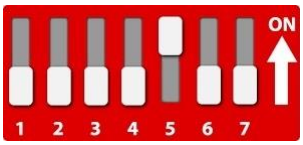

Motor 2 is active (The motor can be maintained with the second motor driver card.)

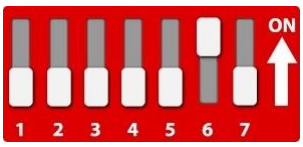

ON; Mechanical limit switch active
OFF; electronic limit switch active

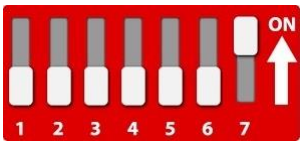

Motor Speed %100 active

NOT: Dipswitch '' 3 '' OFF position the motor speed is 50%.

PARAMETER SETTINGS

T4: 2. Motor delay time

T3: Deceleration distance

T2: Automatic Closing Standby Time

T1: Motor Power

NOT: Trimpot setting; increases Clockwise and decreases Counterclockwise

CONTROL CARD SETTINGS

1. Make sure that the mechanical installation and fitting of the gate is complete and smooth,
2. Connect the 220V cables to motor.
3. Open the mechanical limit switch by taking dipswitch 6 in ON position
4. If automatic closing is required, dip switch 1 is turned on and the time is adjusted with the T2 trimpot.
5. If the second motor is to be used, open dip switch 5
6. Dip switches 3 and 7 are used for motor speed setting.
7. Use the T3 trimpot to set the deceleration distance.
8. Connect 220V power,
9. Check that the D3 processor LED is blinking at fixed intervals,
10. Make sure D5 is in swing mode (constant flashing),
11. Check that the stop Led, Photocell 1 Led and Photocell 2 Led behind the terminals is lit.
12. When the motor is in manual mode open the door to the middle point and get the motor from the manual mode,
13. If 2nd motor is used, the 2nd leaf's delay time is adjusted from the T4 trimpot.
14. **Before starting the limit definition process; If the Remote Control or Start button will be used in the system; Make sure that the remote controls are introduced or the Start button connection has been made.**
15. Press the BT1 button once
16. First, the 1st leaf will start to move in the opening direction, then the 2nd leaf will start to move in the opening direction. When the leafs are fully opened and lean against the stopper, press the defined button of the control or the start button. Then the leafs will start to move in the closing direction. When the leafs are completely closed and lean against the stopper, press the button of the control or the start button. It will start its movement in the opening direction on both leafs. When the leafs are fully opened and rests against the stopper, the limit definition process will be completed.

Problems that can be encountered:

PROBLEM		SOLUTION
You pressed BT1, but the gate moves a bit and stops.	The motor power may be low.	Increase T1 (motor power) trimpot.
You pressed BT1 but the door is closing	The motor may be upside down.	Cut the power off and switch ON # 4 dip switch
You pressed BT1 button, the gate opens but it does not stop when it touched to switch.	Your mechanical switch may be in a passive position.	Cut off the power, change the position of the motor cables, Switch ON the #4 dipswitch.
After you set the gate limits, it opens but does not close.	There may be a problem in the photocell line.	Check the photocell line.
You made all the connections right. You press the BT1 button but the gate does not move,	The processor may have taken to protect itself.	Cut off the power. Recharge the electricity when the LEDs on the card switch OFF. If the problem persists microprocessor card may be malfunctioning, Card must be replaced with a new one.
After adjusted the motor limits, the T1 trim is at the max. setting but if the gate moves a bit and stops	Increase deceleration distances. Motor may be stronger than door	Increase T3 deceleration distance trimpot.
The fault in the previous line continues	Decrease speed settings. Motor may be stronger than door	Using the dip switches 3 and 7, gradually reduce the motor speed.
The remote control is not being identified or working	Make sure that it is plugged into the control receiver socket correctly.	Make sure the remote control receiver is fully pluged in its socket. If your receiver is Rolling code set to common receiver mode. (Switch ON the dipswitch 4 on the receiver and re-identify the remote control)
220 V connected but no LED lights up on board	The fuse may have exploded.	Check the 3A fuse on the card with the gauger. Be sure of its stability.
The fault in the previous line continues	There may be a problem with the transformer and mains voltage.	Check the 220V AC at the transformer input and the 24V AC meter at the transformer output.
2. The wing does not move	2nd flap may not be activated	Set the number 5 to Dipswitch ON
The fault in the previous line continues	2. The motor driver card may not be inserted correctly.	Make sure that the driver card is plugged in and in the correct direction. If it is correctly installed and does not work, there may be a problem with your driver card.
Limit identification process has started. The leafs are waiting in open position and not moving towards closing.	With the remote control or the start button, the trigger may not be given for the closing direction limit process.	Before starting the limit definition process, make sure that the connections have been made if the remote control or start button will be used. When the leafs are in fully open position, you can start the closing direction limit operations with the control or the start button.
Limit identification process is completed, motor or motors continue to draw current	Your T1 engine power trimpod may be turned on too much	Turn down the T1 engine power trimmer counterclockwise until the current draws to the motors.

RF-433 ROLLING RECEIVER – REMOTE CONTROL OPTIONS

TECHNICAL SPECIFICATIONS

Operating Voltage	12 Vdc/24Vdc
Operating Current	20Ma
Operating Heat	-20C ~ 80C
Relay Contact Current	4 A
Relay Contact Time	0,5 sn.
RF Receiver Frequency	433 MHz (Crystalized)
Contact Quantity	1 NC*, 1 NO*
Contact Quantity	1
Quantity of Remote Control should be identified	For Standard Receiver : 1 unit = 1 x 2000 = 2000 Copy
	For Common Receiver: 120 unit = 120 x 2000 = 240.000 copy

1. **Standard Receiver Mode;** On standard receiver mode only 1 remote control can indetify. **provided that the same firm and remote control code** 2000pieces remote control can be copied.
2. **Common Receiver Mode;** In the common receiver mode, 120 different remote controls can be identified with the condition that the receiver and the company code are the same. Each different remote control must be identified once. 120 x 2000 = 240000 remote controls are available.

NOTE: When in common receiver mode, you can identify only the same button of different code remote controls. Example: Only button 1.

Common Receiver Settings

1. Switch ON DipSwitch number 4 (number 1 is for wired receiver)
2. Cut the operating voltage, after 5 sec. connect it,
3. Warning LEDs light up continuously for about 20 seconds after flashing 4 times. You can identify the remote controls after the light goes out.

To return from the common receiver to the standard receiver;

1. Switch OFF the Dipswitch number 4 (number 1 for wired receiver)
2. Cut the operating voltage, after 5 sec. connect it,
3. Warning LEDs light up continuously for about 20 seconds after flashing 4 times. You can identify the remote controls after the light goes out.

NOTE: Remote controls used in the previous mode will be deleted when switching between modes

EXTERNAL SOCKET RECEIVER

EXTERNAL CABLE RECEIVER

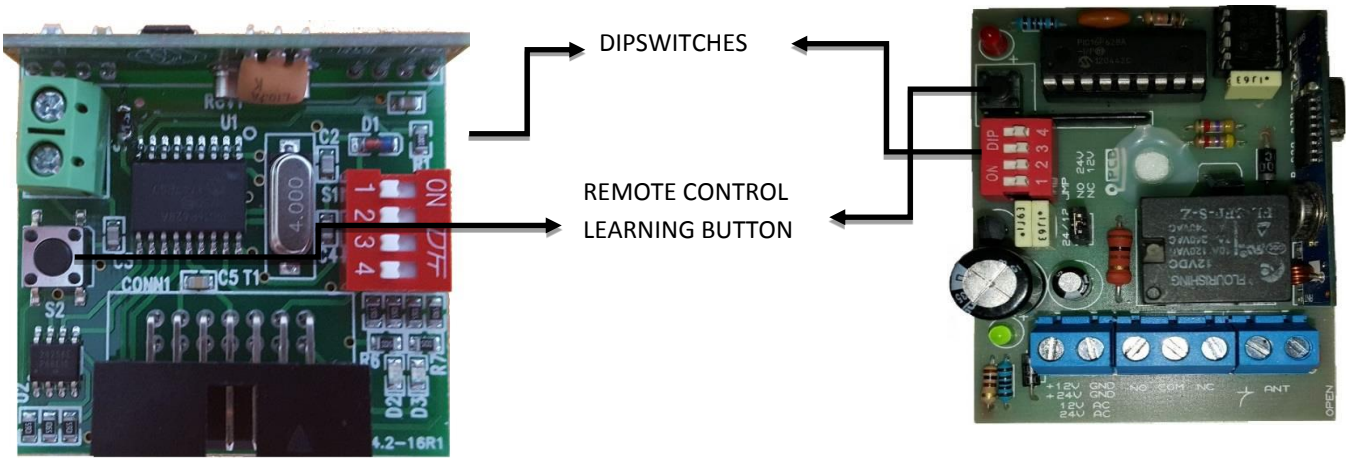

RF-433 ROLLING RECEIVER – REMOTE CONTROL OPTIONS

ATTENTION! Only one firm can identify the control to a receiving card. The controller of another company can not be identified on the receiving card which has been identified once, even if it is the same type.

Identifiying The Remote Control:

ATTENTION! Only one firm can identify the control to a receiving card. The controller of another company can not be identified on the receiving card which has been identified once, even if it is the same type.

1. To identify the remote control to the receiver, press the learning button until the red warning is lighted.
2. Press and hold the button that you want to identify.
3. Pull your hand as the red LED on the receiver starts to flash
4. You can use the remote control after the leds turn off.

In standard receiver mode, you only need to identify one of the remote controls. The other remote controls are copies, they also run them.

For the common receivers, it is enough to introduce one of the different copies.

NOTE: The receiver can not detect the remote controls in different codes from the first programmed remote control code.

Delete Remote Control Code:

ATTENTION! After the remote control deletion, only the first company that identified the remote controls before, idetify the new remote controls to the receiver. The receiver unit will not accept the identifications of other companies, even if they are of the same type.

1. Press and hold on the remote control learning button
2. Warning LED will light up, will go out, and light up again then pull your hand again
3. The warning lights on for 20 seconds and off.

At the end of this process, all the remote controls in the memory are deleted.

Dip switch functions; Dip switch 1; Common receiver on (number 4 for plug-in / socket receiver)
Dip switch 4; sends contact for 5 sec. (number 1 for plug-in / socket receiver)

WARANTY:

RF 433 EXTERNAL RECEIVER is guaranteed for 2 years against problems caused by material.

• The product must be used in accordance with the operating instructions. Problems that may otherwise occur are not covered by the warranty.

• The product is under guarantee only when the card is mounted on the box.

• In case of any malfunction, send the product with the box to technical service. Otherwise, the product is out of warranty.

RF-433 FIXING RECEIVER – REMOTE CONTROL OPTIONS

TECHNICAL SPECIFICATIONS

Operating Voltage	12 Vdc/24Vdc
Operating Current	20Ma
Operating Heat	-20C ~ 80C
Relay Contact Current	4 A
Relay Contact Time	0,5 sn.
RF Receiver Frequency	433 MHz (Crystalized)
Contact Quantity	1 NC*, 1 NO*
Channel Quantity	1

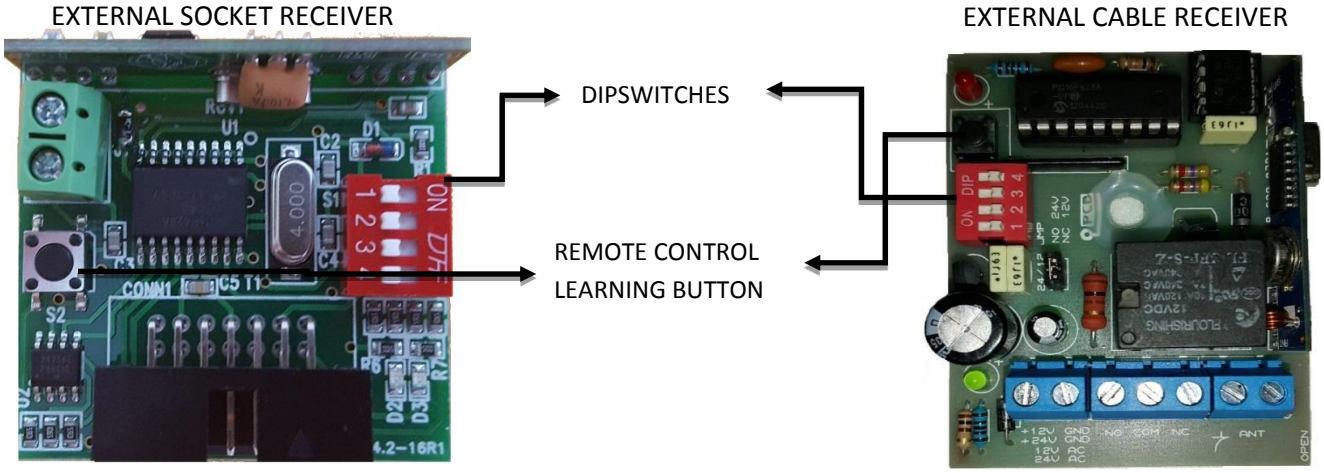

Identifiying The Remote Control:

1. To identify the remote control to the receiver, press the learning button until the red warning is lighted.
2. Press and hold the button that you want to identify.
3. Pull your hand as the red LED on the receiver starts to flash
4. **Apply the same process for each remote control**. The remote controls are ready to use.

Delete Remote Control Code:

1. Press and hold the learning button o99996n the recipient
2. Warning light will light up, then pull your hand when you start flashing.
3. When the warning light is off, the the remote controls in the memory will be erased
4. Dip switch functions: dip switch number 1 is On; sends contacts for 5 sec. (Wired receiver only), other dip switches are nonfunctional.

Dip switch functions; Dip switch 1 is on, it send contacts for 5 sec. (only cabled receiver)
Other dipswitches are nonfunctional.

WARANTY:

RF 433 EXTERNAL RECEIVER is guaranteed for 2 years against problems caused by material.

• The product must be used in accordance with the operating instructions. Problems that may otherwise occur are not covered by the warranty.

• The product is under guarantee only when the card is mounted on the box.

• In case of any malfunction, send the product with the box to technical service. Otherwise, the product is out of warranty.